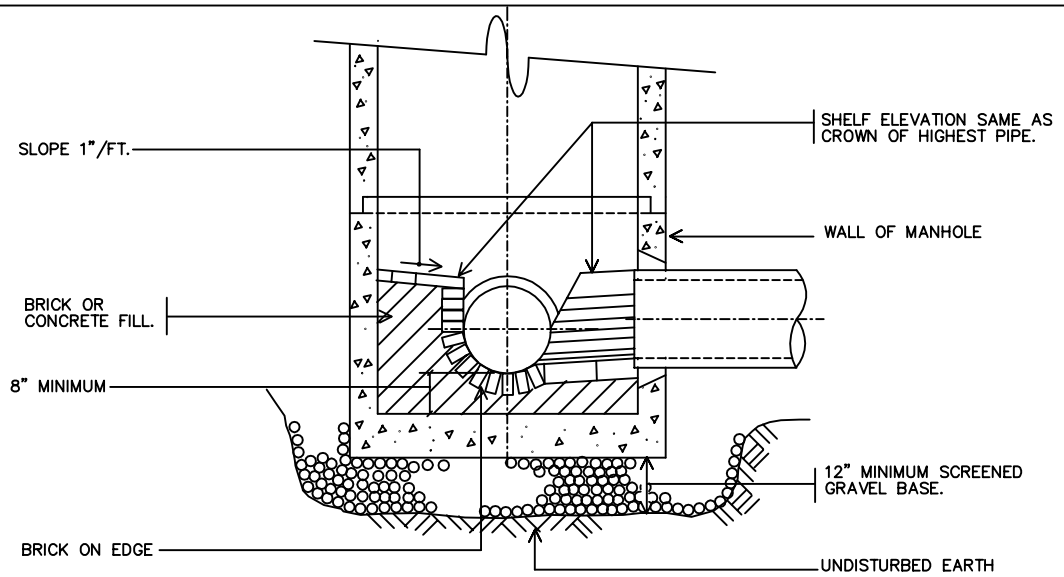

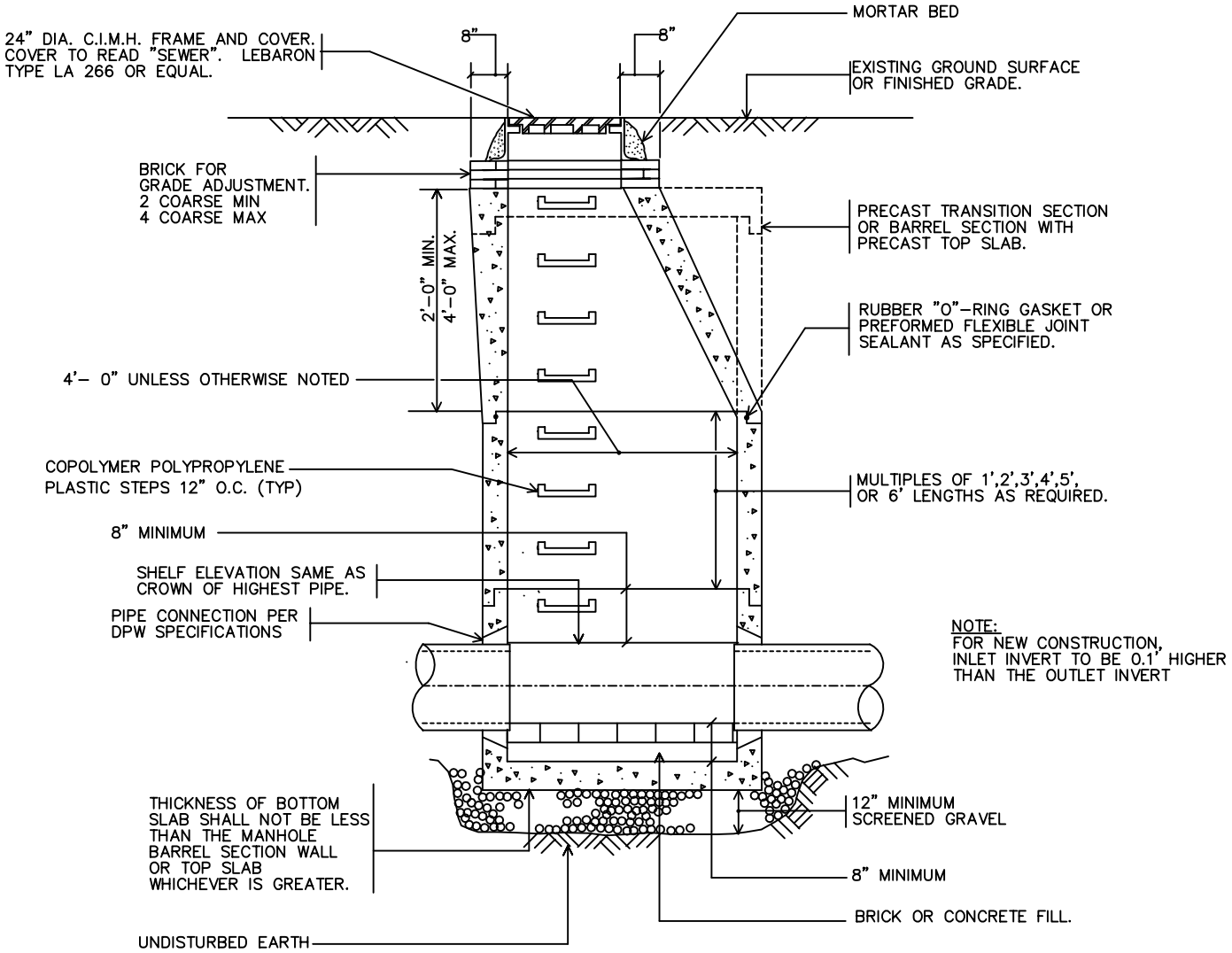

TYPICAL SEWER MANHOLE DETAIL - N.T.S.