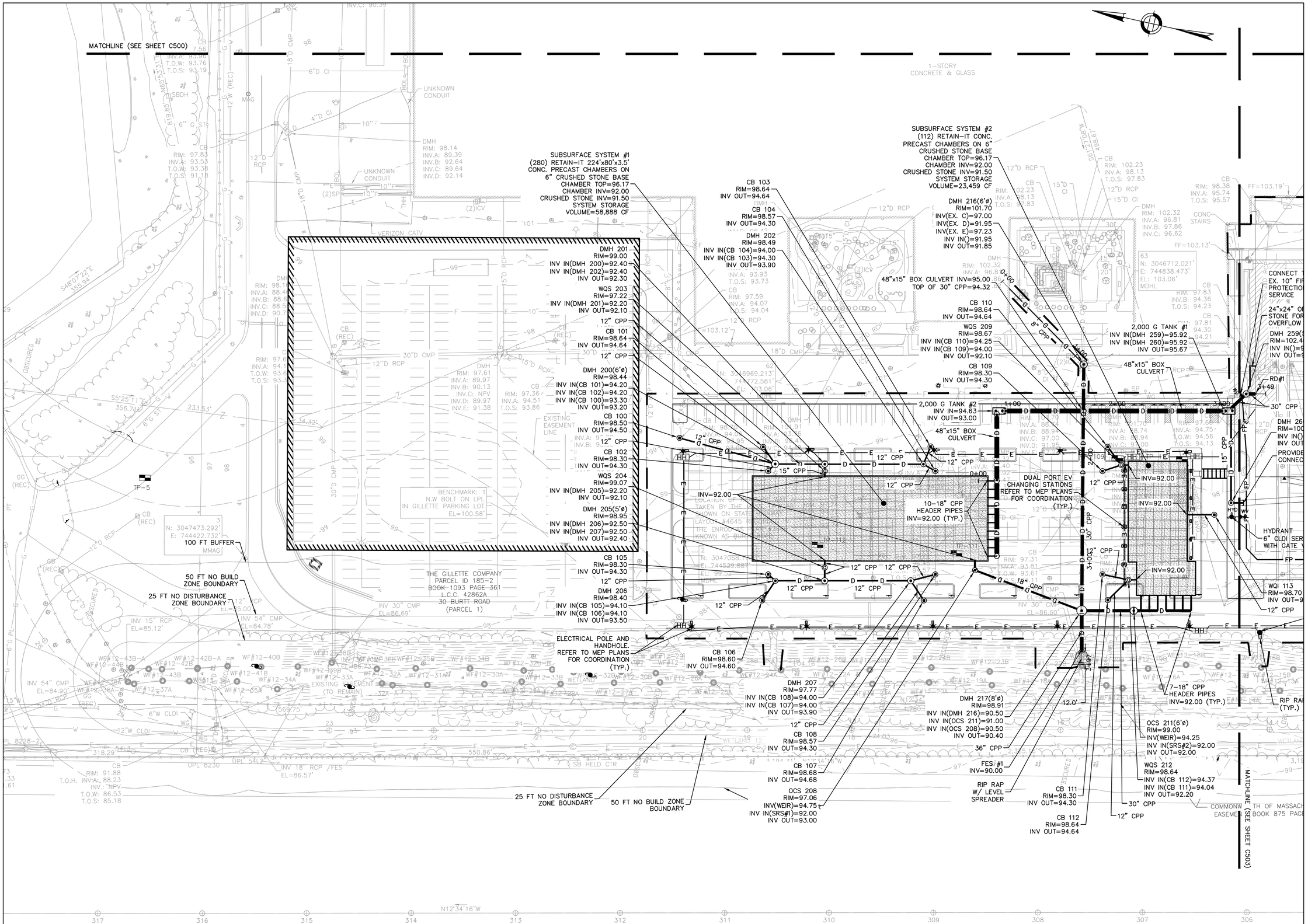

NOTES:
1. REFER TO SHEET C-001 FOR CIVIL NOTES, LEGEND, AND ABBREVIATIONS.
2. ALL DRAIN PIPES TO BE 12" CPP UNLESS NOTED OTHERWISE.

Project:

P&G ANDOVER MANUFACTURING CENTER ENHANCEMENT PROJECT

30 BURTT ROAD
ANDOVER, MA 01810

Nitsch Engineering

PERMITTING SET

NOT FOR CONSTRUCTION

16 APRIL 2024

Key Plan:

Stamp:

COMMONWEALTH OF MASSACHUSETTS
MARISSA JEAN VALENTINO
CIVIL
No. 53354
REGISTERED PROFESSIONAL ENGINEER

9/5/2024

No.	Date	Revision
13	07/12/2024	BULLETIN 13
14	07/30/2024	RESPONSE TO PEER REVIEW COMMENTS
15	08/27/2024	RESPONSE TO PEER REVIEW COMMENTS
16	09/05/2024	RESPONSE TO PEER REVIEW COMMENTS

Job No.:	15363
Drawn By:	BJB/OFY/LMC
Checked By:	DLC
Date:	04/16/2024
Scale:	AS NOTED

Drawing Title:

SITE UTILITY PLAN

Drawing No.:

C-502

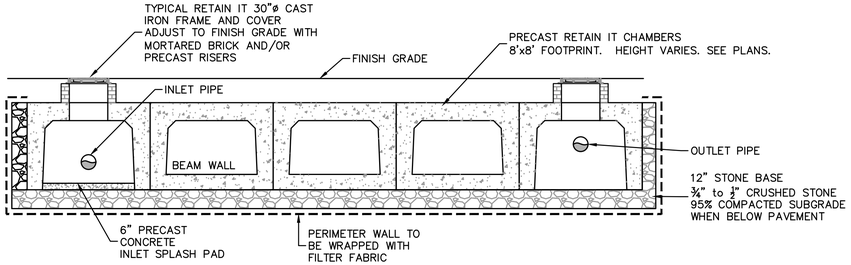

RETAIN IT UNDERGROUND INFILTRATION SYSTEM DETAIL

NOT TO SCALE

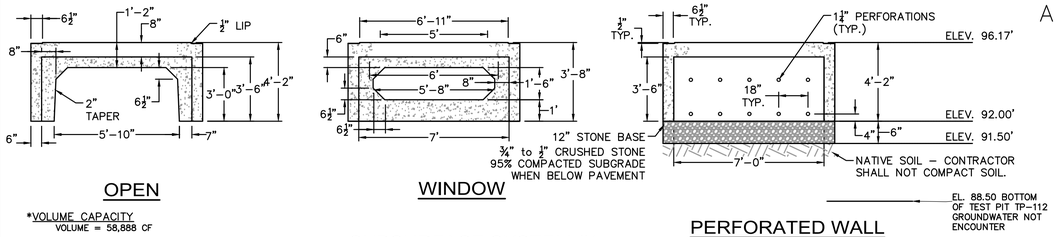

*VOLUME CAPACITY
VOLUME = 58,888 CF

SUBSURFACE SYSTEM #1

NOT TO SCALE

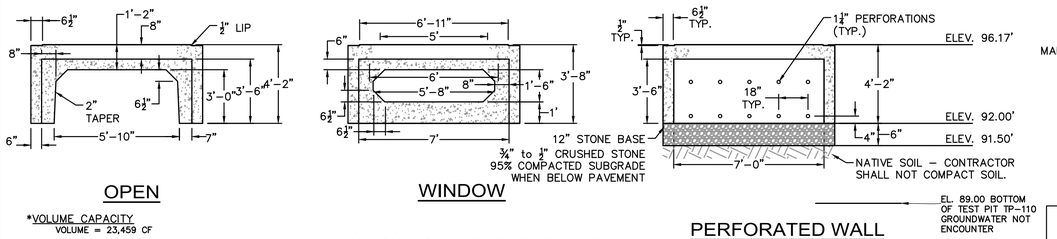

*VOLUME CAPACITY
VOLUME = 23,459 CF

SUBSURFACE SYSTEM #2

NOT TO SCALE

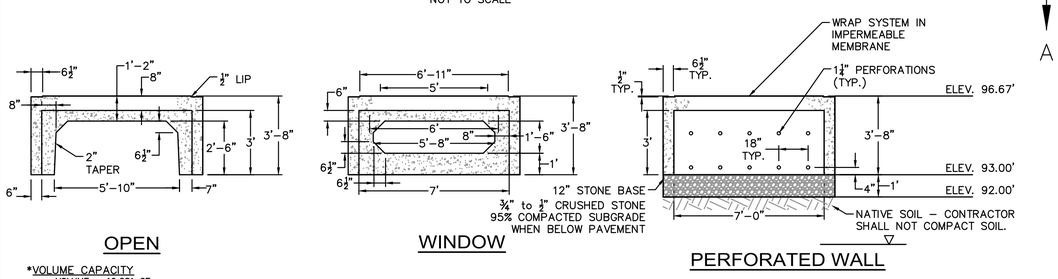

*VOLUME CAPACITY
VOLUME = 19,681 CF

SUBSURFACE SYSTEM #3

NOT TO SCALE

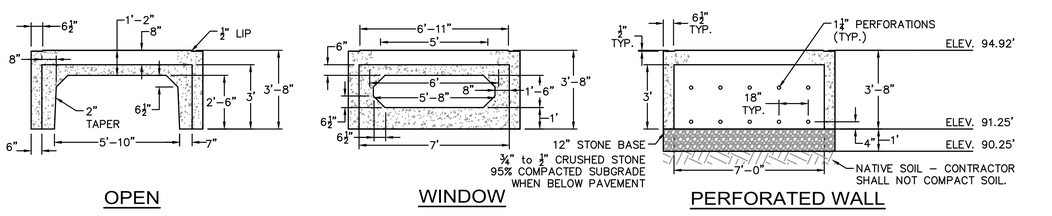

*VOLUME CAPACITY
VOLUME = 6,063 CF

SUBSURFACE SYSTEM #4

NOT TO SCALE

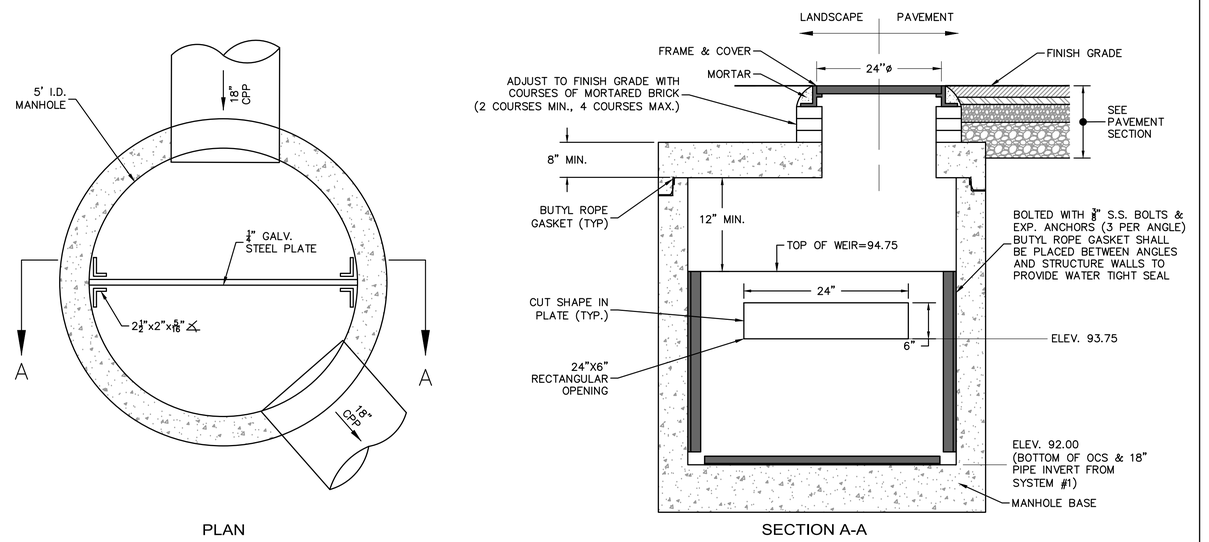

OUTLET CONTROL STRUCTURE - OCS 208 (SUBSURFACE SYSTEM #1)

NOT TO SCALE

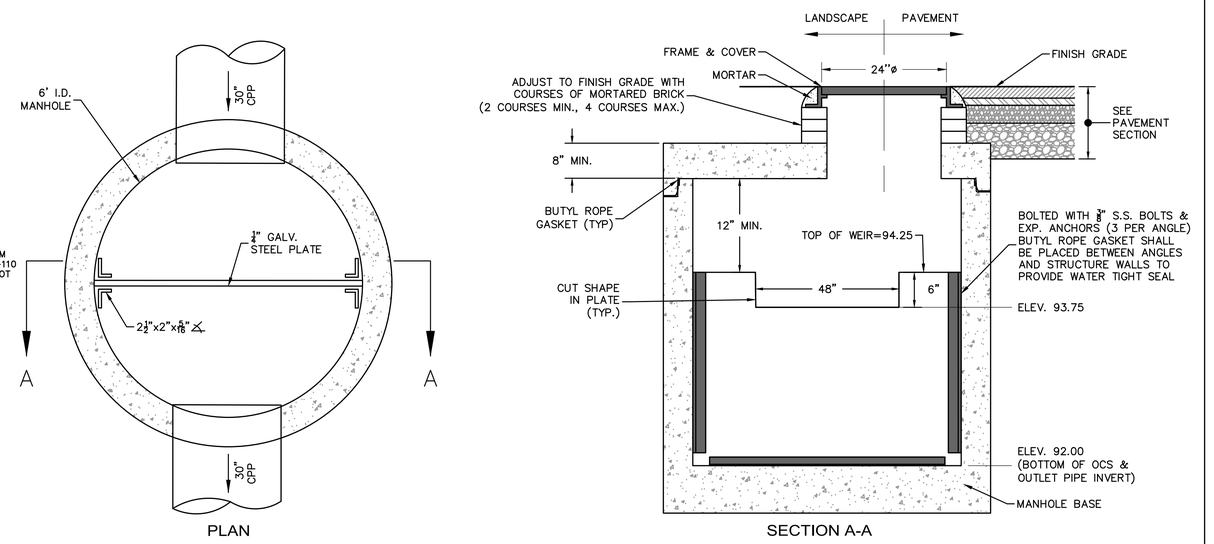

OUTLET CONTROL STRUCTURE - OCS 211 (SUBSURFACE SYSTEM #2)

NOT TO SCALE

Project:

P&G ANDOVER MANUFACTURING CENTER ENHANCEMENT PROJECT

30 BURTT ROAD
ANDOVER, MA 01810

Nitsch Engineering

PERMITTING SET

NOT FOR CONSTRUCTION

16 APRIL 2024

Key Plan:

Stamp:

COMMONWEALTH OF MASSACHUSETTS
MARISSA JEAN VALENTINO
CIVIL
No. 53354
REGISTERED PROFESSIONAL ENGINEER
9/5/2024

No.	Date	Revision
13	07/12/2024	BULLETIN 13
14	07/30/2024	RESPONSE TO PEER REVIEW COMMENTS
15	08/27/2024	RESPONSE TO PEER REVIEW COMMENTS
16	09/05/2024	RESPONSE TO PEER REVIEW COMMENTS

Job No.:	15363
Drawn By:	BJB/OFY/LMC
Checked By:	DLC
Date:	04/16/2024
Scale:	NTS

Drawing Title:
CIVIL DETAILS IV

Drawing No.:
C-603