INGRESS FIRE TRUCK MOVEMENT

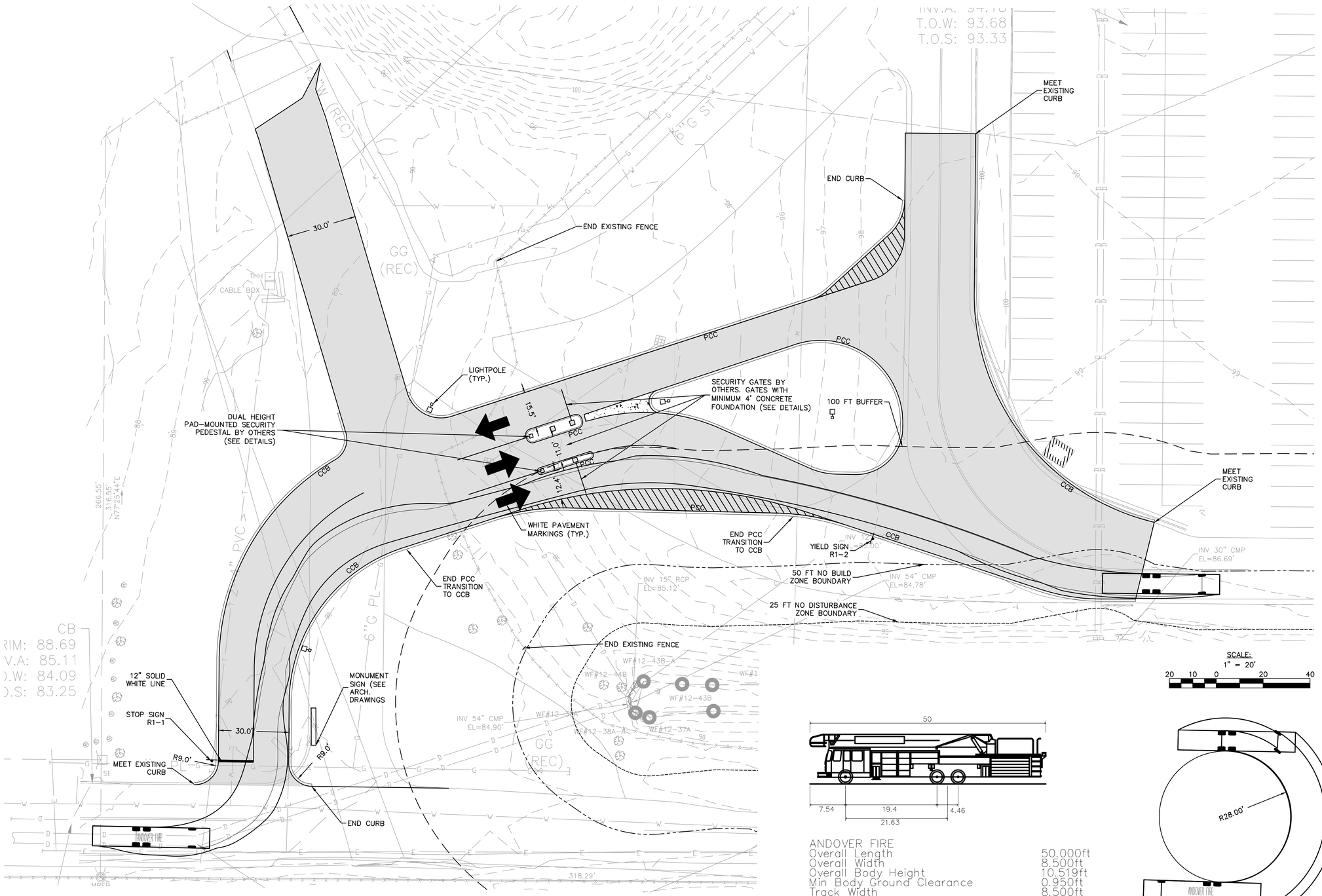

SCALE:
1" = 20'
20 10 0 20 40

ANDOVER FIRE	
Overall Length	50.000ft
Overall Width	8.500ft
Overall Body Height	10.519ft
Min Body Ground Clearance	0.950ft
Track Width	8.500ft
Lock-to-lock time	6.00s
Max Wheel Angle	45.00°

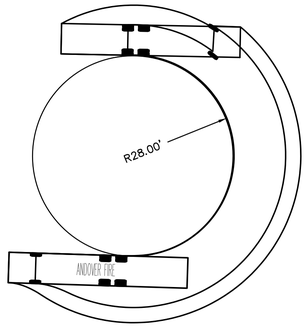

MINIMUM INSIDE TURNING RADIUS

SCALE:
1" = 20'
20 10 0 20 40

Project:

NORTH GATE

Fennick McCredie Architecture

BRA+

LeMessurier.

Nitsch Engineering

ground

NOT FOR CONSTRUCTION

Stamp:

No.	Date	Revision

Job No.:	PRINCIPIO EVE
Drawn By:	WDB/BJB
Checked By:	MJV
Date:	1/06/2026
Scale:	1" = 20'-0"

Drawing Title:
ANDOVER FIRE VEHICLE TRACKING - INGRESS

Drawing No.:
VT-1

EGRESS FIRE TRUCK MOVEMENT

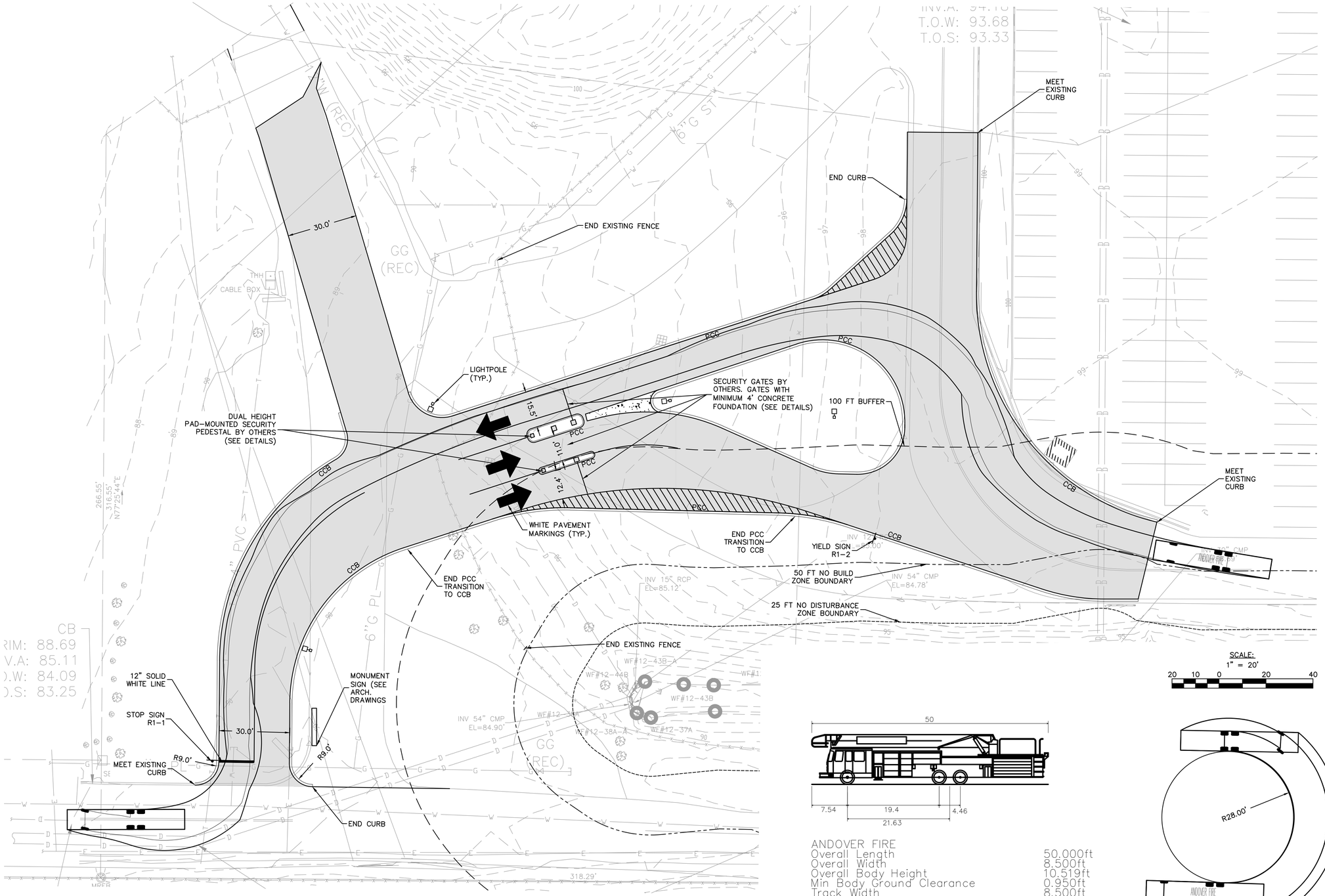

ANDOVER FIRE	
Overall Length	50.000ft
Overall Width	8.500ft
Overall Body Height	10.519ft
Min Body Ground Clearance	0.950ft
Track Width	8.500ft
Lock-to-lock time	6.00s
Max Wheel Angle	45.00°

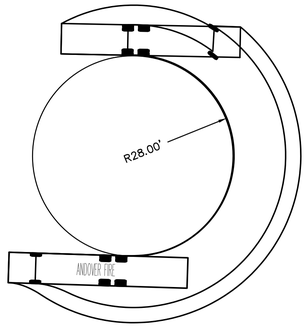

MINIMUM INSIDE TURNING RADIUS

SCALE:
1" = 20'
20 10 0 20 40

Project:

NORTH GATE

Fennick McCredie Architecture

BRA+

LeMessurier.

Nitsch Engineering

ground

NOT FOR CONSTRUCTION

Stamp:

No.	Date	Revision

Job No.:	PRINCIPIO EVE
Drawn By:	WDB/BJB
Checked By:	MJV
Date:	1/06/2026
Scale:	1" = 20'-0"

Drawing Title:
ANDOVER FIRE VEHICLE TRACKING - EGRESS

Drawing No.:
VT-2